

DUO SIM CARAVAN

FLIGHT SIMULATOR

VirtualFly

VIRTUALFLY

INFO

DUO SIM CARAVAN



This Flight Simulator is an exact model representation of the Cessna Caravan 208. In terms of flight training, flying in this cockpit feels like seating down in the real airplane. The exact cockpit dimensions, shapes, and ergonomics, make it ideal to train muscle memory and normal procedures.







FEATURES I

ADVANCED AVIONICS SUITE



Full C208 Garmin G1000 PFD, MFD & PFD2 avionics. Features Garmin GMC 710

Aircraft-Accurate Autopilot and Flight Director

PRECISION-ENGINEERED C208 AIRCRAFT FLIGHT CONTROLS



THROTTLE QUADRANT with C208

Power, Propeller, Condition Levers

Dual Cessna C208 Style Yokes

tailored to feel like the real aircraft

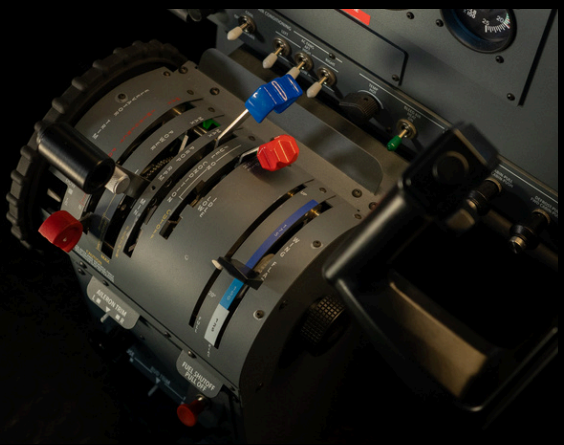

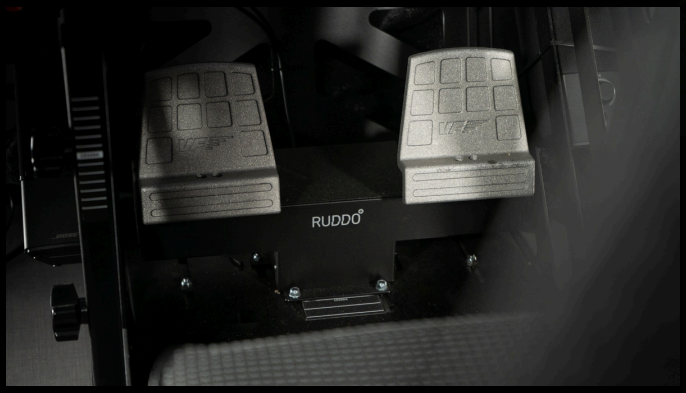

DUAL RUDDO+ Rudder Pedals with

pressure cells and designed for

long lasting performance

VIRTUALFLY

FEATURES II

LATEST GENERATION VISUAL SYSTEM



225° Wide Angle Visual System with Full HD Realistic Scenery from XPlane 12.



OVERHEAD PANEL

Fully Functional and Cessna Caravan Aircraft Accurate Overhead Panel Representation

PEDESTAL WITH MOTORISED TRIM

Complete Pedestal Replica Featuring all Controls Found on Cessna Caravan Aircraft.

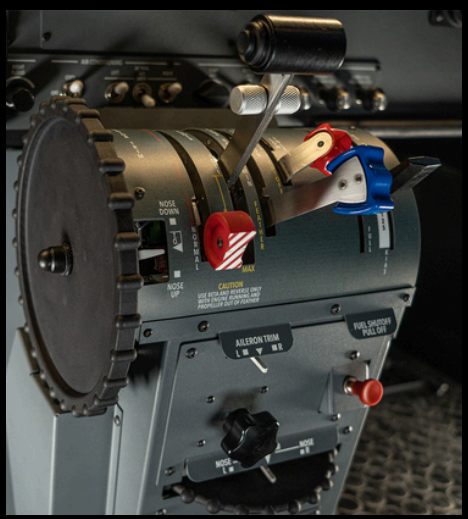

IGNITION & ELECTRICAL PANEL

Fully Operative Electrical and Engine Start Panel Switches



STANDBY GAUGES

Altimeter, Artificial Horizon, Airspeed and Torque Indicators for redundancy .



VIRTUALFLY

FEATURES III

COMPREHENSIVE AIRCRAFT SYSTEMS MODELLING



Complete and Realistic Cessna Caravan Cockpit Representation Enables a High Degree of Procedural and Operative Accuracy

CIRCUIT BRAKERS

All Main Flight Panels and Lateral Panel Circuit Breakers are represented in a decorative fashion.

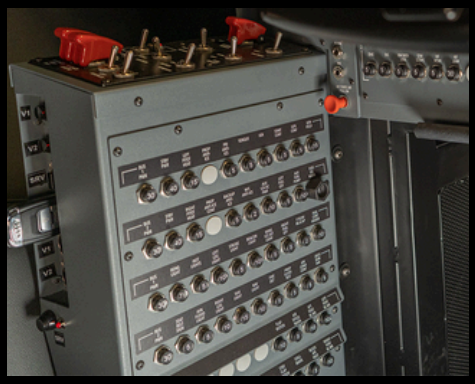

INDEPENDENT INSTRUCTOR OPERATING STATION



Advanced Instructor Station to Control All Aspects of the Training Environment. Modify in Real Time Weather, Locations, Failures and much more.

VIRTUALFLY

COCKPIT LAYOUT

1 LIGHTS PANEL

Left and Right Landing Light, Beacon, Taxi/Recognize, Navigation, Strobe, No Smoke, Seatbelt, Cabin

2 ANTI-ICE PANEL

Pitot/Static heat, Stall Heat, wing light, fluid control (primary high, max flow airframe/windshield, backup)

3 LATERAL PANEL

External power, Master Battery, Generator Switch, Fuel Boost, Standby ALT Power, Ignition Starter, Avionics 1 & 2, Avionics Stby PWR and Avionics BUS TIE

9 OTHER

Static air, prop heat, parking brake, hobbs meter, inertial separator, ARTEX ELT, Cabin heat (not functional), Air Conditioning, Dimming Rotaries, Overspeed Governor Test, Fire Detect Test, Headsets Connectors, Ventilation System



4 OVERHEAD PANEL

Stby Flap Motor Switches, Oxygen Lever and Gauge, Fuel Tank Selectors and 3 Map lights

5 CIRCUIT BREAKERS



9

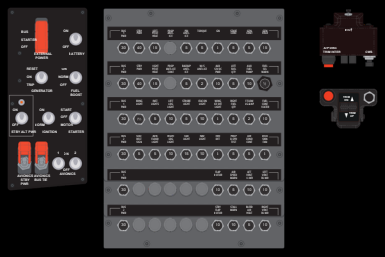

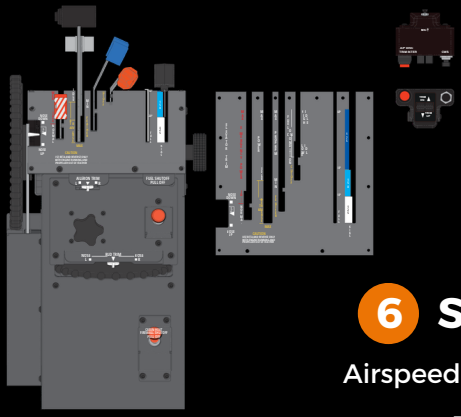

7 AVIONICS

Garmin G1000 PFD, MFD & PFD2 and Audio Panel with GMC 710 Autopilot

6 STBY GAUGES

Airspeed, Attitude, Altitude and Torque Gauges

8 THROTTLE QUADRANT AND PEDESTAL

Power lever with BETA and reverse zones, Emergency Power Lever, Prop Lever with feather zone, Fuel Condition lever, Flap Indicator, Four position flap switch, Elevator, Rudder and Aileron Trim Wheels; Cabin heat firewall, Fuel Shutoff

VIRTUALFLY

PRICE

BASIC CONFIGURATION

For pricing information contact our Sales Representatives at info@virtual-fly.com



OPTIONAL ITEMS

All flight simulators have common optionals that you can add to your chosen configuration. Add 1, 2 or 3 optionals depending on your needs:

DUO SIM OPTIONAL 2DOF motion system with protection. Motion platform with total of 32° movement on roll and pitch axes, turn speed of 16°/sec.





DUO SIM OPTIONAL Back cover of Cabin Solid fiber back cover, exterior white painted, for more inmersive covering, giving more real flying sensation. With interior ventilation, light and upholstery.

These prices do not include any possible taxes derived from destination country, shipping and installation costs

LEAD TIME

VirtualFly has the capacity to handle multiple orders at this time. We anticipate a lead time of approximately 12 weeks for the completion of your order.

INSTALLATION

This simulator comes completely assembled and with quality control from the factory. The final customer will need to inform about the final location of the simulator. The minimum space needed to get the simulator through is 2,4m height x 2,4m wide.

If the simulator, in order to get to the final location, needs to go through smaller doors or spaces or through obstacles, VirtualFly must be informed in order to calculate an installation price. This will include everything needed to disassemble the simulator onsite, transport it to the final room, re assemble the machine in this final location and leave it ready to fly.

SHIPPING

In regards to shipping, we will provide you with a quotation for the final amount once we have received your final destination address. We will use this information to calculate the cost of shipping and handling, which will be added to the final cost of your order.

SERVICE & SUPPORT

- 90% of the issues related with our flight simulators are solved under 1 hour via remote connection to any part of the world. If you have any issues, our contact email is support@virtual-fly.com where we count with a dedicated team of professionals so your simulator keeps flying.
- Monday to Friday phone and email support. Saturday and Sunday full support is available with an extra cost of 3000$.
- Remote hands service for solving software issues.

PAYMENT TERMS & MODE

- 50% AFTER ORDER PLACED.
- 50% BEFORE SHIPPING.

FINANCING

We offer financing options tailored to each client.

REGION OF USE

- Worldwide.

LIABILITY & RESPONSIBILITY

- https://www.virtual-fly.com/terms-and-conditions

PROPOSAL VALIDATION

- 60 days from proposal

WARRANTY PERIOD

- 3 Years.

VIRTUALFLY

TECHNICAL DATA I

BASE MODEL:

MAXIMUM DELIVERY MEASURES (BEFORE INSTALATION)

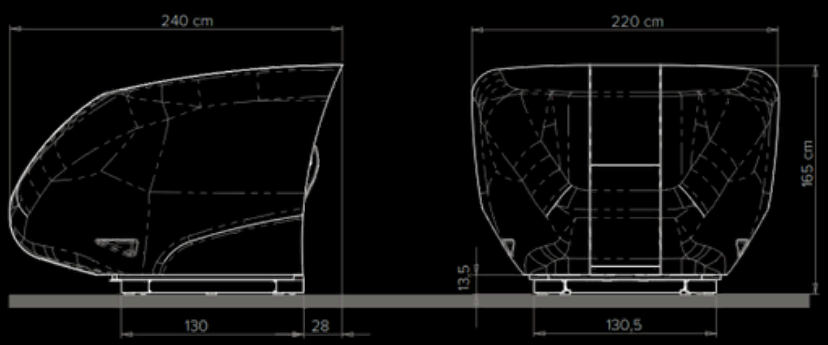

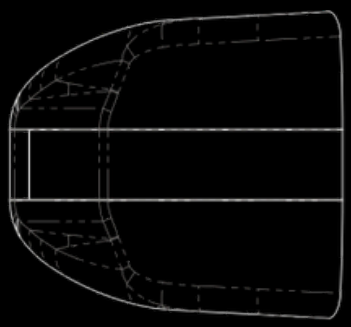

TECHNICAL DATA	
Weight	420 Kg
Pay Load	250 Kg
Simulation software	Prepar 3D/XPlane 11/12
Nominal current	2,5A (230V) - 5A (115V)
Peak current	3,1A (230V) - 6,2A (115V)
Voltage	115-230 VAC, mono, 50/60 Hz

TECHNICAL REQUIREMENTS

115-230 VAC domestic power supply with earth protection, domestic differential switch.

Leveled floor.

Clean and dry room (not suitable for outdoor use).

INCLUDING BACKCOVER OPTIONAL:

MAXIMUM DELIVERY MEASURES (BEFORE INSTALATION)

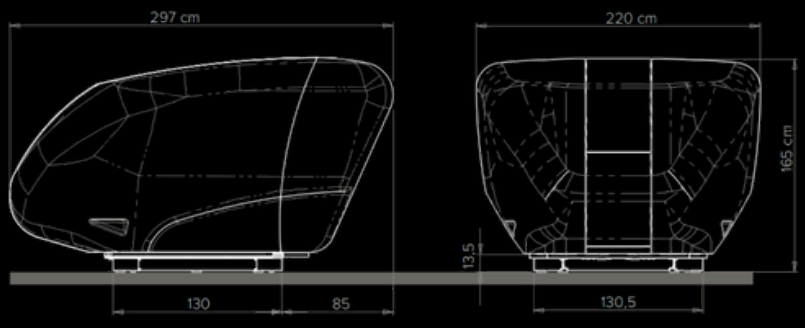

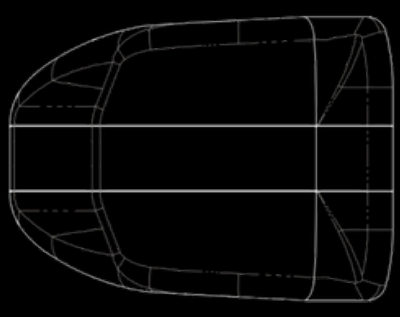

TECHNICAL DATA	
Weight	470 Kg
Pay Load	250 Kg
Simulation software	Prepar 3D/XPlane 11/12
Nominal current	2,5A (230V) - 5A (115V)
Peak current	3,1A (230V) - 6,2A (115V)
Voltage	115-230 VAC, mono, 50/60 Hz

TECHNICAL REQUIREMENTS

115-230 VAC domestic power supply with earth protection, domestic differential switch.

Leveled floor.

Clean and dry room (not suitable for outdoor use).

VIRTUALFLY

TECHNICAL DATA II

WITH 2DOF MOTION SYSTEM OPTIONAL:

MAXIMUM DELIVERY MEASURES (BEFORE INSTALATION)

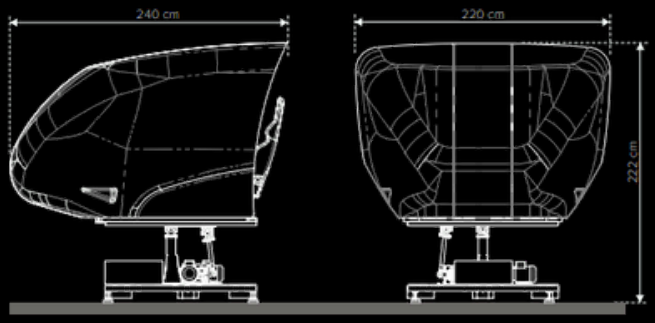

TECHNICAL DATA	
Weight	650 Kg
Pay Load	250 Kg
Pitch and roll angle	-16° <-> +16°
Turn speed	20° / s
Simulation software	Prepar 3D/XPlane 11/12
Nominal current	2,5A (230V) - 5A (115V)
Peak current	3,1A (230V) - 6,2A (115V)
Voltage	115-230 VAC, mono, 50/60 Hz

TECHNICAL REQUIREMENTS
115-230 VAC domestic power supply with earth protection, domestic differential switch.
Leveled floor.
Clean and dry room (not suitable for outdoor use).

MAXIMUM MEASURES IN MOTION

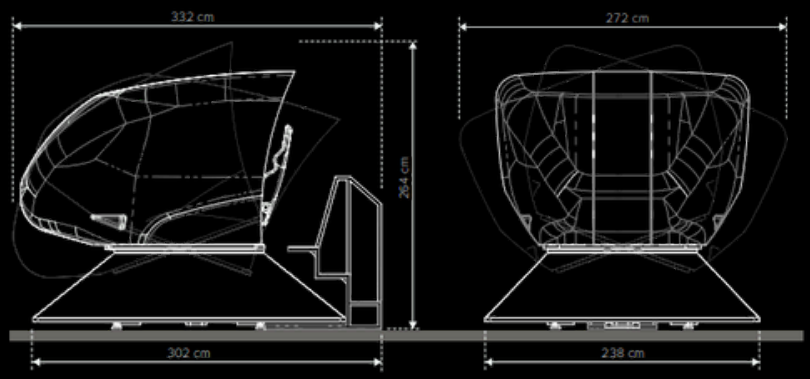

SECURITY PERIMETER RECOMMENDED

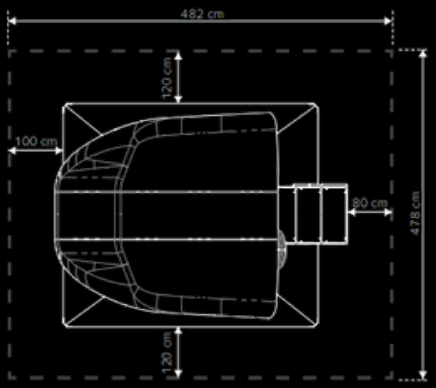

WITH 2DOF MOTION SYSTEM AND BACK COVER OPTIONALS:

MAXIMUM DELIVERY MEASURES (BEFORE INSTALATION)

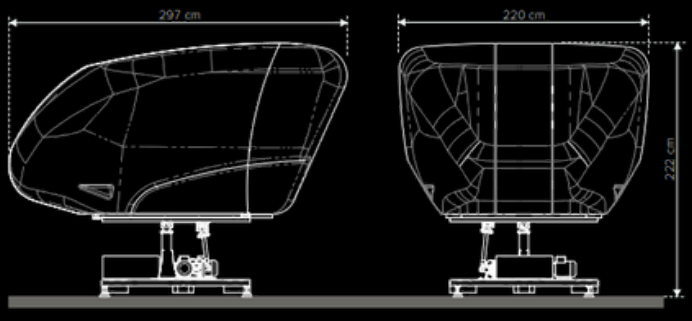

TECHNICAL DATA	
Weight	700 Kg
Pay Load	250 Kg
Pitch and roll angle	-16° <-> +16°
Turn speed	12° / s
Simulation software	Prepar 3D/XPlane 11/12
Nominal current	2,5A (230V) - 5A (115V)
Peak current	3,1A (230V) - 6,2A (115V)
Voltage	115-230 VAC, mono, 50/60 Hz

TECHNICAL REQUIREMENTS
115-230 VAC domestic power supply with earth protection, domestic differential switch.
Leveled floor.
Clean and dry room (not suitable for outdoor use).

MAXIMUM MEASURES IN MOTION

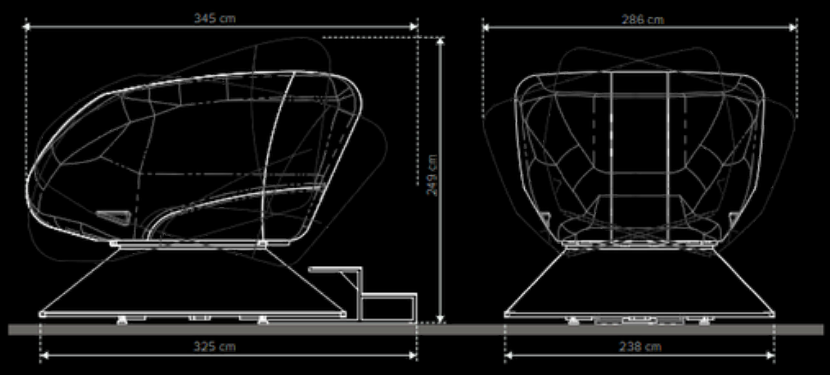

SECURITY PERIMETER RECOMMENDED

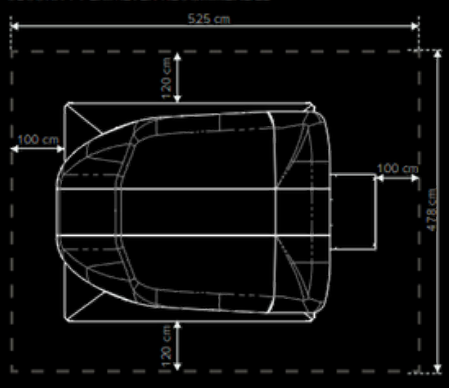

VIRTUALFLY

REFERENCES OF OUR SIMULATORS

These are some clients that trust in our equipment

TESTIMONIALS

"Cypress university has three SOLO PRO A Simulators amongst other virtual fly components. We needed a flight sim lab to continue the quality education we offer, and these certified devices were exactly what the university was looking for"
Ed Valdez, Airliner Pilot and Aviation Program Director at Cypress University

"MTSU University has a large fleet of Diamond Aircraft and therefore we needed and affordable DA40 simulator. After searching different options we concluded that Virtual Fly was the best quality-price option"
MTSU Representative

"Mercer County Community College included three SOLO PRO G1 to their simulator fleet after trying them at FSANA Orlando. We were impressed with the quality and innovation they offered"
MCCC Representative

VIRTUALFLY

REFERENCES OF OUR SIMULATORS

CYPRESS COLLEGE

Contact:
Ed Valdez
edvaldez767@gmail.com
714 330 2779





JA FLIGHT TRAINING

Contact:
Dale Wiegan
dwiegand@jaflight.com
630 362 0991





KIT CARSON COUNTY AIRPORT

Contact:
Daniel Melia
daniel.melia@burlingtoncolo.com
719 342 3889

VIRTUALFLY

SIMULATOR PORTFOLIO

FAA CERTIFIED FLIGHT SIMULATORS



SOLO PRO A

Cessna 172S & Cessna 182RG



SOLO PRO G1

Cessna 172S & Cessna 182RG



SOLO PRO D4

Diamond DA40



Analogue Cockpit for
Beechcraft Baron G58



GlassCockpit for
Beechcraft Baron G58



DUO PRO CARAVAN

Cessna Caravan 208

VIRTUALFLY

SIMULATOR PORTFOLIO

OTHER FLIGHT SIMULATORS



DUO SIM MEG

C172S, C182RG, DA40, Baron G58 & DA42



DUO SIM MEAC

C172S, C182RG,, Baron G58 & King Air 350



DUO SIM PHENOM-X

Embraer Phenom 300



DUO SIM CESSNA

C172S, C182RG, C206

COMPANY & CONTACT

SALES CONTACT

Cristian Sánchez
csanchez@virtual-fly.com
(+34) 606 376 723

COMMUNITY

@virtualflysimulators

@VirtualFlyVideos

HQ, R&D LABS AND SHOWROOMS

Virtual Fly North America
IL- CHICAGO
JA Flight Training
43W772 US-30, Sugar Grove, IL 60554

Virtual Fly Europe HQ, R&D Center & Showroom
c. Maria Aurèlia Capmany, 21
P. I. La Fàbrica
08297 Castellgalí (Spain)

GET IN TOUCH

M: +34 606 376 723
T. +34 93 833 33 01
US Toll Free: 888 689 4554
info@virtual-fly.com
support@virtual-fly.com